Powercor

Regulatory Investment Test for Distribution Melton and Bacchus Marsh

Final project assessment report

Table of contents

1 Summary

This final project assessment report has been prepared by Powercor Australia Limited (**Powercor**) in accordance with the Regulatory Investment Test for Distribution (**RIT-D**) requirements of the National Electricity Rules (**the Rules**).[1] This final project assessment report follows our non-network options report published in August 2014, and a draft project assessment report published on 29 January 2016.

The purpose of this final project assessment report is to inform the market on the credible options assessed to address network capacity supply constraints at the following locations:

- Melton (**MLN**) zone substation; and
- Bacchus Marsh (**BMH**) zone substation.

Results of the consultation on the Draft Project Assessment Report

The draft project assessment report sought feedback from stakeholders including Registered Participants, the Australian Energy Market Operator (**AEMO**), non-network providers, interested parties as well as persons on our demand side engagement register.

Submissions to the draft report were sought by 18 March 2016. Only one formal submission was received which includes a non-network proposal.

The non-network proposal from Greensync Pty Ltd (**Greensync**) primarily sought to address the N rating issue of the BLTS-BMH 66kV sub-transmission line via a five year demand management scheme targeted at customers supplied from the BMH zone substation. Subsequent toGreensync's submission, discussions between Powercor and AEMO defined that the emergency arrangement for closing the BLTS-BMH-BATS 66kV loop could become a more formal arrangement during summer. As the load at risk related to the sub-transmission N rating issue can now be effectively mitigated via operational means, the proponent decided to withdraw their original proposal as it is no longer economically viable to address the identified need.

Changes from the Draft Project Assessment Report

The following are key changes made to the final project assessment report in relation to the identified need:

- capital costs of the options to address the identified need have been updated; and
- we have now been granted permission to close the BLTS-BMH-BATS 66kV loop as an operational response to the BLTS-BMH 66kV line reaching its N rating. This avoids the overloading issues faced on the BLTS-BMH 66kV line and the associated energy at risk. This load at risk associated with this constraint has therefore been removed from our assessment.

[1] Specifically, version 73 of the Rules, clause 5.17.4.

Preferred Option

Based on the analysis presented in this report, our preferred option is to install a third transformer in the MLN zone substation, as well as construct a new 22kV feeder to transfer 5 MW of load from BMH customers to MLN.

The estimated total direct capital cost of the project is $7.8 million.

2 Background network information

This section sets out background information regarding the network in the Melton and Bacchus Marsh areas.

2.1 Melton

The Melton zone substation (**MLN**) is located on the corner of Graham Street and Reserve Road, in Melton. MLN provides electricity supply to a total of 21,675 customers, including 20,453 domestic, 1,007 commercial, 145 industrial, and 70 agricultural customers. The areas supplied include the suburbs of Melton, Melton South, Melton West, Kurunjang, Rockbank and Brookfield. Figure 2.1 shows the area supplied by MLN at a high level.

Figure 2.1 Geographical area supplied by Melton zone substation

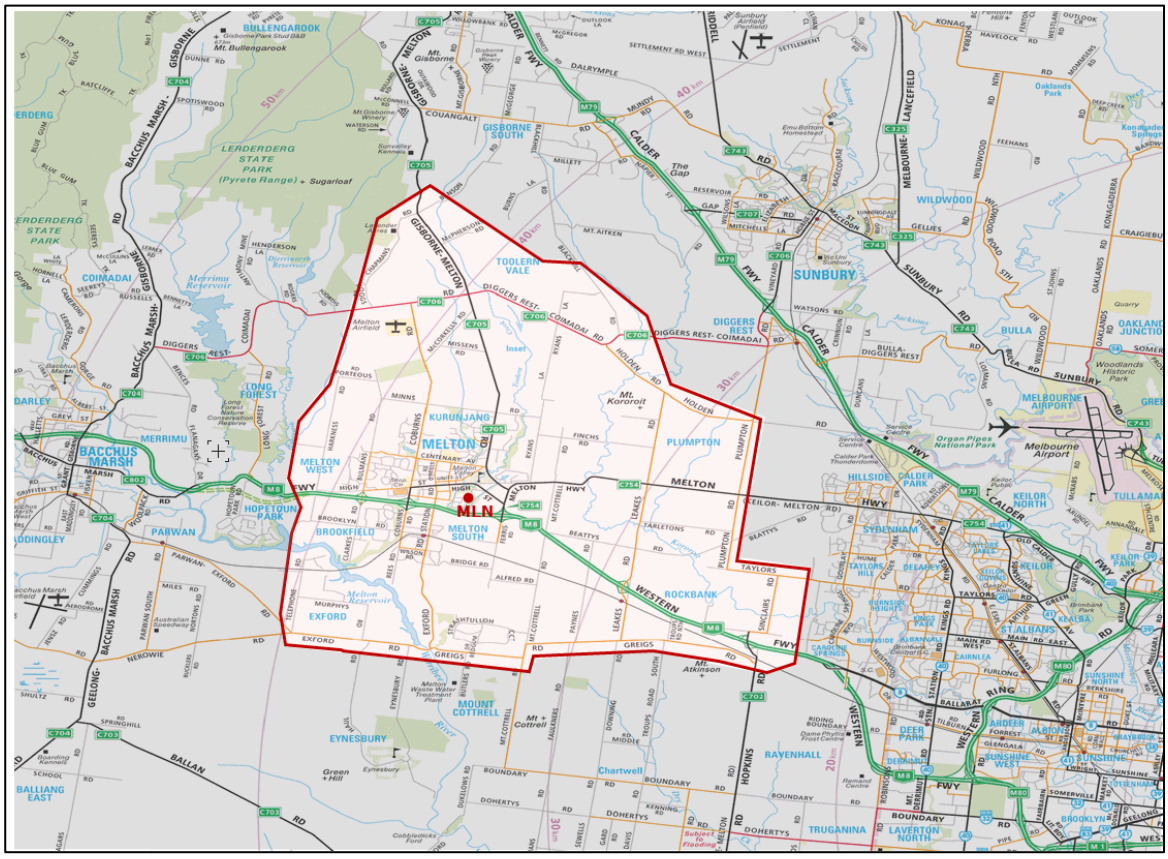

Source: Reproduced from the Melway Street Directory with permission, overlay locations of zone substation and zone substation coverage area added by Powercor

MLN is currently served by two 66kV sub-transmission lines from the Keilor Terminal Station (**KTS**). The zone substation is a fully switched station consisting of two 20/27/33 MVA 66/22kV transformers supplying two indoor 22 kV buses with eight distribution feeders.

The zone substation predominately experiences summer afternoon-into-evening peak demand, driven by residential customers and supported by a strong commercial demand during the day.

2.2 Bacchus Marsh

The Bacchus Marsh zone substation (**BMH**) is located on the corner of Bacchus Marsh-Balliang Road and Kerrs Road, Maddingley. BMH provides electricity supply to a total of 10,566

customers, including 9,431 domestic, 719 commercial, 169 industrial, and 247 agricultural customers. The suburbs supplied include Bacchus Marsh, Maddingley, Darley, Greendale, Ballan and Myrniong. Figure 2.2 below shows the area supplied by BMH.

Figure 2.2 Geographical area supplied by Bacchus Marsh zone substation

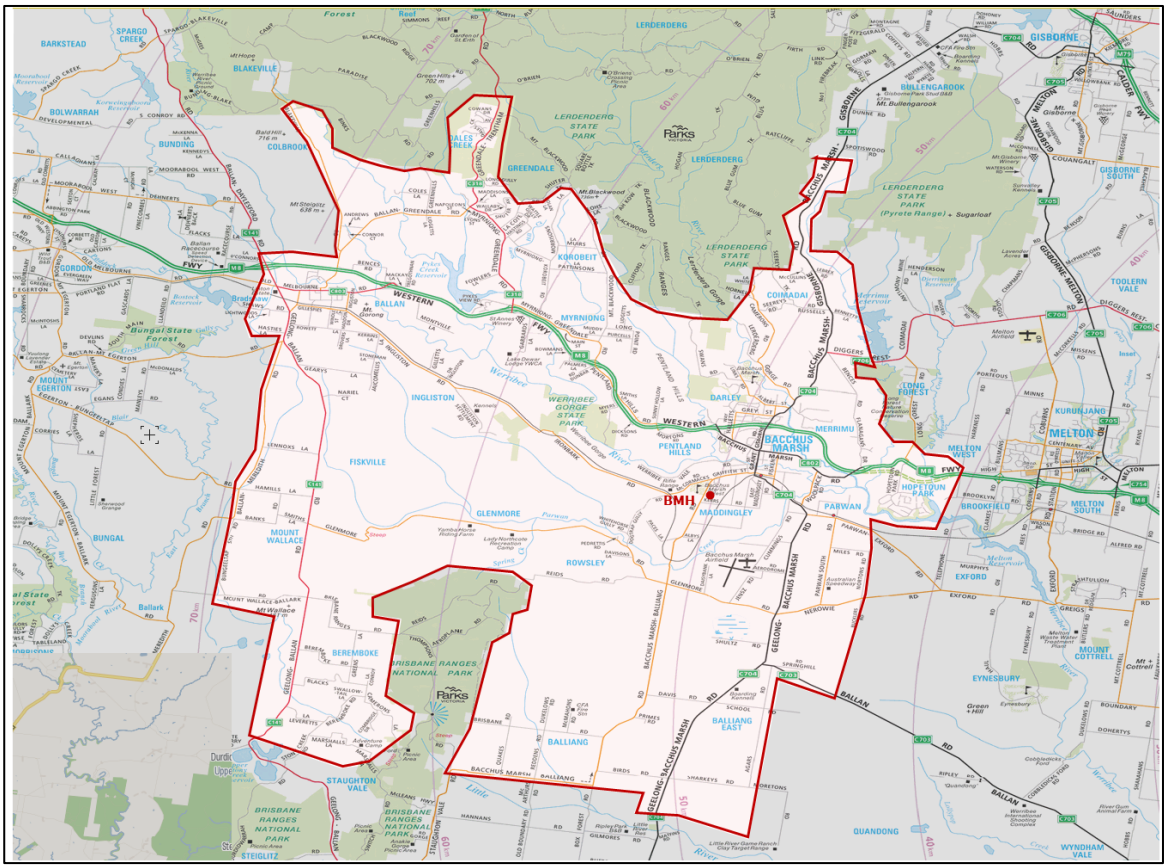

Source: Reproduced from the Melway Street Directory with permission, overlay locations of zone substation and zone substation coverage area added by Powercor.

BMH is currently supplied by a 66kV sub-transmission line from the Brooklyn terminal station (**BLTS**) with backup supply via a 66kV sub-transmission line from the Ballarat terminal station (**BATS**) via an auto changeover scheme at BMH. The zone substation is a banked station consisting of two 10/13.5 MVA 66/22kV transformers supplying two 22kV buses with four distribution feeders.

The zone substation experiences both summer evening and winter hot water load peaks.

2.3 BLTS to BMH sub-transmission line

As noted above, the BMH zone substation is supplied by a 66kV sub-transmission line from BLTS. The total length of the BLTS-BMH 66kV line is 56.4kms, with the circuit consisting of a mixture of aluminium (AAC, ACSR) and copper (Cu, Cd) conductors. The backup supply BATS-BMH 66kV line is 52kms in length, with the circuit consisting of a mixture of aluminium (AAC) and copper (Cu, Cd) conductors.

Figure 2.3 Single line diagram of the BLTS-BMH 66kV sub-transmission line

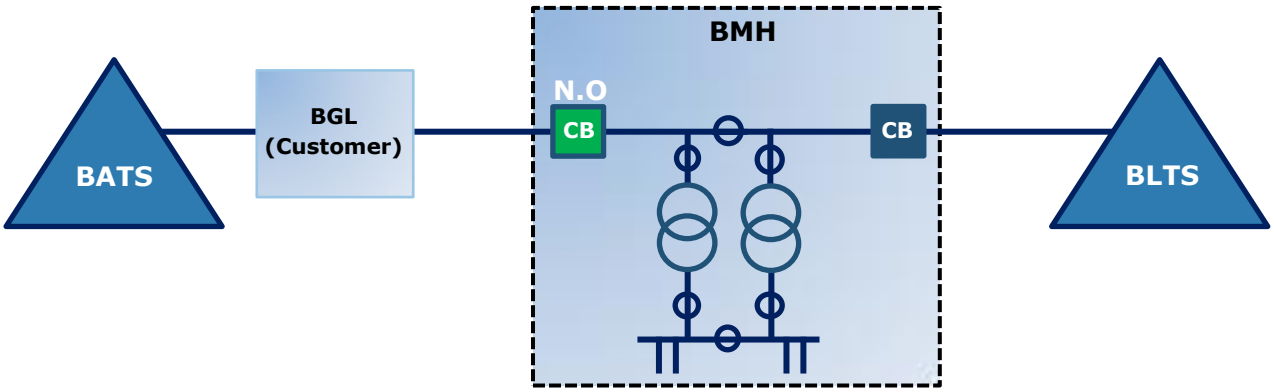

3 Description of the identified need

We adopt a probabilistic approach to planning our zone substation and sub-transmission asset augmentations. This involves estimating the probability of an outage occurring within the peak loading period, and weighting the expected cost that will be incurred if no action is taken to address the constraint.

3.1 Probability of an outage occurring within the peak loading period

The probability of an outage occurring within the peak loading period is based on an assessment of forecast maximum demand and load, relative to the capacity of the relevant infrastructure. For this final project assessment report, the relevant infrastructure is assessed under the following two scenarios:

- probability of maximum demand exceeding the N-1 rating of the infrastructure; and
- probability of maximum demand exceeding the N rating of the infrastructure.

Our forecasts of maximum demand and load used in our analysis have been developed from a reconciliation of bottom-up forecasts based on network data, and top-down econometric forecasts.

Bottom-up forecasts are developed from historical demand values that are trended forward, with the addition of known and predicted loads that may be connected to the network in future. This includes taking into account the number of customer connections and the estimated total output of known embedded generating units in the forecast period.

Top–down econometric forecasts are prepared for us by the Centre for International Economics (**CIE**), which is an independent economic forecaster. These forecasts are based on statistical modelling that derives historical relationships between various economic and environmental variables and demand. This is consistent with the best practice methodology used for forecasting by the Australian Energy Market Operator (**AEMO**).

Our forecasts are seasonally based and, when stated as a seasonal figure they present a peak demand forecast for either summer from November to March of the next year, or for winter from June to August of the same year. Where forecasts are stated for a full year they present the level expected to occur across the summer and winter periods and correspond to the the year of the winter season. For example, the year shown as 2017 therefore corresponds to the period starting from the beginning of summer in November 2016 and ending at the end of winter in October 2017. This has been done to retain consistency with our Distribution Annual Planning Report (**DAPR**).

3.1.1 Probability of an outage occurring at MLN

Figure 3.1 shows the historical and forecast summer 50 per cent and 10 per cent probabilities of exceedance (**PoE**) for maximum demand against the MLN zone substation N and N-1 ratings.

Figure 3.1 Forecast maximum demand against the station ratings at MLN

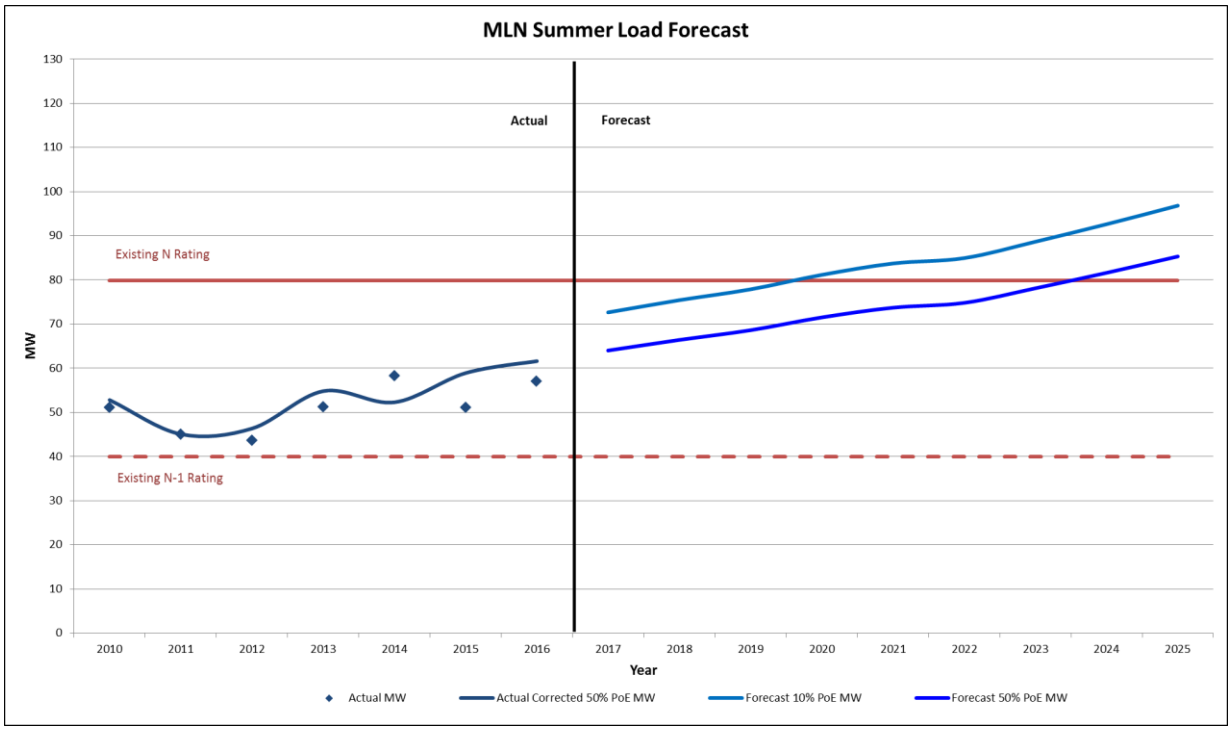

Source: Powercor

Based on the above, we identified the following issues at MLN:

- MLN is currently loaded above the station N-1 cyclic rating for actual and forecast 50 per cent PoE for maximum demand. As a consequence, customers are already exposed to the risk of supply interruptions in the event of a failure of a single transformer at the zone substation;
- by 2020, at the 10 per cent PoE maximum demand level, there will be insufficient capacity at the zone substation to supply peak demand with all plant in service;
- at the 50 per cent PoE load forecast, with one transformer out of service (N-1 rating), customers will face a supply interruption due to insufficient capacity at the station unless action is taken to reduce demand or increase capacity at MLN;
- only limited load transfer capability exists between MLN zone substation and the neighbouring zone substations at BMH and Sunshine (**SU**). As a result, customers could potentially be left without supply until capacity in the neighbouring network becomes available. As forecast load growth continues, the available transfer capability diminishes, leaving a greater number of customers exposed to the risk of a supply interruption due to insufficient network capacity; and
- strong load growth is expected in the Rockbank East, Plumpton and Koroit areas following the release of the new Precinct Structure Plans (**PSP**) by the Melbourne Planning Authority (**MPA**).

3.1.2 Probability of an outage occurring at BMH

Figure 3.2 shows the historical and forecast summer 50 per cent and 10 per cent PoE for maximum demand against the BMH zone substation N and N-1 ratings.

Figure 3.2 Forecast maximum demand against the station ratings at BMH

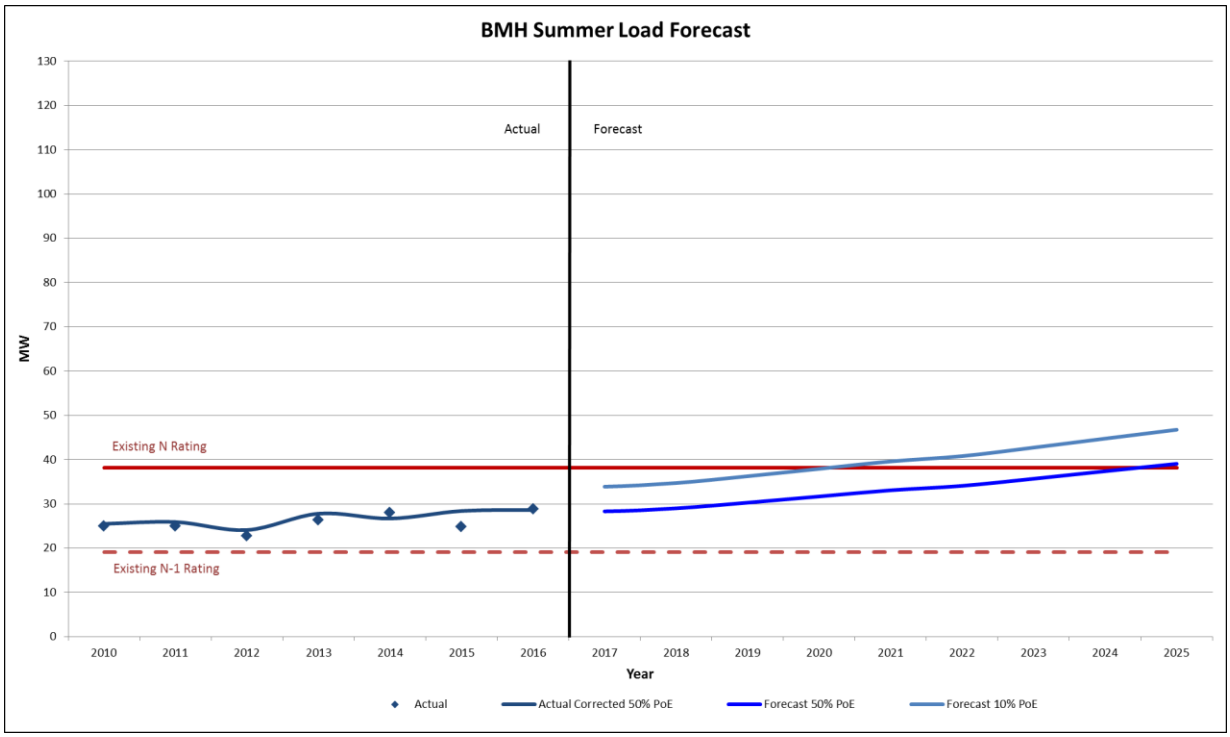

Source: Powercor

Based on the above, we identified the following issues at BMH:

- BMH is approaching the N cyclic rating of the substation, and is now already above the N-1 cyclic rating. As a consequence, customers are exposed to supply interruptions in the event of a failure of a single transformer at the zone substation;
- by 2020, at the 10 per cent PoE demand level, there will be insufficient capacity at the zone substation to supply all demand with all plant in service;
- at the 50 per cent PoE load forecast, with one transformer in service (N-1 rating), customers will face a supply interruption due to insufficient capacity at the station, unless action is taken to reduce demand or increase capacity at BMH; and
- limited load transfer capability exists between BMH zone substation and the neighbouring zone substations at MLN and Ballarat North (**BAN**). As a result, customers could potentially be left without supply until capacity in the neighbouring network becomes available. As forecast load growth continues, the available transfer capability diminishes, leaving a greater number of customers exposed to the risk of supply interruption due to insufficient network capacity.

3.1.3 Probability of an outage occurring on BLTS-BMH 66kV line

The forecast peak demand at BMH zone substation will also cause the BLTS-BMH 66kV sub-transmission line to exceed its N line rating under system normal conditions. During our assessment of the submissions to the draft project assessment report, the basis for closing the BLTS-BMH-BATS 66kV loop was revisited. At the time of writing the draft project assessment report, Powercor was only able to close the tie in emergency circumstances for minimal periods

of time. This was due to AEMO's desire not to provide a sub-transmission path, parallel to the transmission system, between two terminal stations.

Through consultation, the possibility of extended operational closing of the BLTS-BMH-BATS 66kV loop when the BLTS-BMH 66kV N rating was close to being reached was raised. Following system studies, operational checks and the definition of suitable operational safeguards with AEMO, permission was granted to close the loop during periods of peak demand at BMH. This new operational procedure is now in place and alleviates the N rating sub-transmission constraint from the remit of this RIT-D. The load at risk associated with this constraint has now been removed from the assessment of options within the assessment period of this final report. The N-1 line rating constraint is unchanged and the load at risk above the N-1 rating remains part of the RIT-D assessment.

3.2 Expected cost if no action is taken to address the constraint

To estimate the expected costs that will be incurred if no action is taken to address a network constraint, we weight the expected costs against the probability of an outage occurring within the peak loading period. To calculate the expected costs, the expected unserved energy (in MWh) that would not be supplied in the event of a transformer failure is multiplied by the probability of a transformer failure.

The expected unserved energy is expressed as a dollar value by multiplying the energy quantity by the value of customer reliability (**VCR**). This approach facilitates a comparison of the economic impact of supply interruptions. For this draft project assessment report, we have calculated the expected unserved energy using the assumptions set out in Table 3.1.

Table 3.1 Assumptions used to evaluate load at risk, expected unserved energy, and hours at risk

Variable	Assumption
Growth in forecast demand (base case)	MLN: 3.4 per cent annual growth in load forecast BMH: 2.9 per cent annual growth in load forecast BLTS-BMH: 3.2 per cent annual growth in load forecast
Weighting of demand forecasts to estimate expected unserved energy	Total unserved energy estimated by taking a 70 per cent weighting of expected unserved energy at the 50th percentile forecast and 30 per cent weighting of expected unserved energy at the 10th percentile forecast
Value of Customer Reliability (VCR)	MLN: $35,004 per MWh BMH: $35,951 per MWh Note: Based on the VCR data published by AEMO, the VCR is calculated on the proportion of commercial, industrial, residential and agricultural customers supplied by the zone substation.
Transformer failure rate	1 per cent per annum A major failure is expected to occur once per 100 transformer-years
Duration of transformer outage	1900 hours A total of 2.6 months is required to repair/replace the transformer, during which time the transformer is out of service
Sub-transmission line failure rate	0.05 per cent per annum

Variable	Assumption
66kV line duration of outage	8 hours

Source: Powercor

Our calculations of expected unserved energy, based on the assumptions outlined above, are set out in Table 3.2 to Table 3.14. These calculations are presented separately for both the N and N-1 ratings at MLN, BMH and BLTS-BMH line, and for load forecasts depicting the 50 per cent and 10 per cent PoE.

Table 3.2 MLN: load at risk and expected unserved energy for N rating at 50 per cent PoE load forecast

Metric	2017	2018	2019	2020	2021	2022	2023	2024	2025	2026
Load above N Rating (%)	0%	0%	0%	0%	0%	1%	5%	10%	15%	20%
Load at risk (MVA)	0.0	0.0	0.0	0.0	0.0	0.0	2.1	5.9	9.8	14.0
Energy at risk (MWh)	0	0	0	0	0	0	3	25	83	177
Expected unserved energy ($ 000's)	0	0	0	0	0	0	90	858	2,852	6,191
Hours at risk	0	0	0	0	0	0	3	10	22	35

Table 3.3 BMH: load at risk and expected unserved energy for N rating at 50 per cent PoE load forecast

Metric	2017	2018	2019	2020	2021	2022	2023	2024	2025	2026
Load above N Rating (%)	0%	0%	0%	0%	0%	0%	2%	6%	11%	16%
Load at risk (MVA)	0.0	0.0	0.0	0.0	0.0	0.0	0.0	0.0	1.7	3.8
Energy at risk (MWh)	0	0	0	0	0	0	0	0	3	19
Expected unserved energy ($ 000's)	0	0	0	0	0	0	0	0	108	693
Hours at risk	0	0	0	0	0	0	0	0	3	13

Table 3.4 BLTS-BMH: load at risk and expected unserved energy for N rating at 50 per cent PoE load forecast

Metric	2017	2018	2019	2020	2021	2022	2023	2024	2025	2026
Load above N Rating (%)	0%	0%	0%	0%	0%	0%	0%	0%	0%	0%
Load at risk (MVA)	0.0	0.0	0.0	0.0	0.0	0.0	0.0	0.0	0.0	0.0
Energy at risk (MWh)	0	0	0	0	0	0	0	0	0	0
Expected unserved energy ($ 000's)	0	0	0	0	0	0	0	0	0	0

Metric	2017	2018	2019	2020	2021	2022	2023	2024	2025	2026
Hours at risk	0	0	0	0	0	0	0	0	0	0

Table 3.5 MLN: load at risk and expected unserved energy for N rating at 10 per cent PoE load forecast

Metric	2017	2018	2019	2020	2021	2022	2023	2024	2025	2026
Load above N Rating (%)	0%	0%	3%	7%	11%	12%	17%	23%	28%	34%
Load at risk (MVA)	0.0	0.0	2.2	5.8	8.5	9.8	13.8	18.1	22.7	27.4
Energy at risk (MWh)	0	0	3	24	58	82	183	339	567	880
Expected unserved energy ($ 000's)	0	0	101	826	2000	2832	6301	11,673	19,504	30,820
Hours at risk	0	0	3	10	17	22	33	50	68	92

Table 3.6 BMH: load at risk and expected unserved energy for N rating at 10 per cent PoE load forecast

Metric	2017	2018	2019	2020	2021	2022	2023	2024	2025	2026
Load above N Rating (%)	0%	0%	0%	0%	6%	10%	15%	21%	26%	32%
Load at risk (MVA)	0.0	0.0	0.0	0.6	2.4	3.7	5.7	7.9	10.1	12.8
Energy at risk (MWh)	0	0	0	0	6	17	50	106	190	350
Expected unserved energy ($ 000's)	0	0	0	14	222	594	1,780	3,802	6,844	12,579
Hours at risk	0	0	0	1	6	11	22	36	53	83

Table 3.7 BLTS-BMH: load at risk and expected unserved energy for N rating at 10 per cent PoE load forecast

Metric	2017	2018	2019	2020	2021	2022	2023	2024	2025	2026
Load above N Rating (%)	0%	0%	0%	0%	0%	0%	0%	0%	0%	0%

Metric	2017	2018	2019	2020	2021	2022	2023	2024	2025	2026
Load at risk (MVA)	0.0	0.0	0.0	0.0	0.0	0.0	0.0	0.0	0.0	0.0
Energy at risk (MWh)	0	0	0	0	0	0	0	0	0	0
Expected unserved energy ($ 000's)	0	0	0	0	0	0	0	0	0	0
Hours at risk	0	0	0	0	0	0	0	0	0	0

Table 3.8 MLN: load at risk and expected unserved energy for N-1 rating at 50 per cent PoE load forecast

Metric	2017	2018	2019	2020	2021	2022	2023	2024	2025	2026
Load above N Rating (%)	73%	79%	85%	93%	99%	102%	111%	120%	130%	141%
Load at risk (MVA)	26.9	29.4	32.1	36.0	39.2	40.1	44.8	50.0	55.0	60.3
Energy at risk (MWh)	2,154	2,679	3,230	4,077	4,831	5,247	6,7147	8,708	11,362	12,870
Expected unserved energy ($ 000's)	74,063	92,120	111,080	140,187	166,145	180,422	230,891	299,450	390,721	450,499
Hours at risk	260	306	352	430	505	549	704	933	1,244	1,398

Table 3.9 BMH: load at risk and expected unserved energy for N-1 rating at 50 per cent PoE load forecast

Metric	2017	2018	2019	2020	2021	2022	2023	2024	2025	2026
Load above N Rating (%)	61%	65%	72%	80%	88%	94%	103%	113%	122%	133%
Load at risk (MVA)	16.6	17.9	20.5	23.1	26.0	27.8	31.0	34.4	37.6	41.4
Energy at risk (MWh)	1,599	1,992	2,964	4,256	6,115	7,455	10,314	14,003	17,957	22,191
Expected unserved energy ($ 000's)	57,490	71,606	106,549	153,024	219,830	268,035	370,788	503,430	645,578	798,007
Hours at risk	166	191	249	335	460	576	842	1,198	1,607	1,941

Table 3.10 BLTS-BMH: load at risk and expected unserved energy for N-1 rating at 50 per cent PoE load forecast

Metric	2017	2018	2019	2020	2021	2022	2023	2024	2025	2026
Load above N Rating (%)	24%	30%	35%	46%	51%	56%	61%	66%	71%	83%
Load at risk (MVA)	4.7	6.3	7.7	10.8	12.2	13.6	15.0	16.5	18.1	23.5
Energy at risk (MWh)	38	80	214	530	837	1,258	1,815	2,541	3,470	7,339
Expected unserved energy ($ 000's)	1,354	2,860	7,678	19,068	30,103	45,240	65,256	91,341	124,751	263,920
Hours at risk	24	44	110	205	284	376	486	622	789	1,504

Table 3.11 MLN: load at risk and expected unserved energy for N-1 rating at 10 per cent PoE load forecast

Metric	2017	2018	2019	2020	2021	2022	2023	2024	2025	2026
Load above N Rating (%)	91%	99%	106%	114%	121%	125%	135%	145%	157%	169%
Load at risk (MVA)	38.4	41.7	45.1	49.5	53.1	54.1	59.4	65.2	70.8	76.8
Energy at risk (MWh)	4,919	6,049	7,295	9,303	11,169	12,153	15,759	20,345	25,713	27,382
Expected unserved energy ($ 000's)	169,173	208,033	250,857	319,918	384,077	417,926	541,939	699,653	884,230	958,489
Hours at risk	487	603	740	978	1,207	1,311	1,725	2,164	2,528	2,773

Table 3.12 BMH: load at risk and expected unserved energy for N-1 rating at 10 per cent PoE load forecast

Metric	2017	2018	2019	2020	2021	2022	2023	2024	2025	2026
Load above N Rating (%)	80%	85%	93%	103%	112%	119%	129%	141%	152%	165%
Load at risk (MVA)	23.9	25.4	28.3	31.3	34.6	36.7	40.3	44.2	47.8	52.0
Energy at risk (MWh)	4,110	5,025	7,237	10,150	14,045	16,863	22,329	28,825	35,369	41,516

Metric	2017	2018	2019	2020	2021	2022	2023	2024	2025	2026
Expected unserved energy ($ 000's)	147,383	180,204	259,540	364,015	503,694	604,752	800,757	1,033,739	1,268,400	1,492,938
Hours at risk	1,461	1,762	2,385	3,094	3,840	4,292	5,007	5,653	6,164	6,551

Table 3.13 BLTS-BMH: load at risk and expected unserved energy for N-1 rating at 10 per cent PoE load forecast

Metric	2017	2018	2019	2020	2021	2022	2023	2024	2025	2026
Load above N Rating (%)	31%	37%	42%	54%	60%	65%	71%	76%	82%	105%
Load at risk (MVA)	15.1	17.9	21.9	27.6	30.8	34.0	37.3	40.8	44.3	54.0
Energy at risk (MWh)	412	629	1,230	2,201	3,040	4,116	5,463	7,103	9,050	17,323
Expected unserved energy ($ 000's)	14,810	22,610	44,233	79,125	109,287	147,973	196,395	255,363	325,354	622,955
Hours at risk	171	228	366	547	694	884	1,094	1,320	1,548	2,759

Table 3.14 Expected unserved energy for combined zone substations MLN and BMH, and 66kV sub-transmission line BLTS-BMH

Expected unserved energy	2017	2018	2019	2020	2021	2022	2023	2024	2025	2026
50 per cent POE N ($ 000's)	-	-	-	-	-	-	90	858	2,960	6,883
50 per cent POE N-1 ($ 000's)	132,907	166,586	225,307	312,279	416,078	493,697	666,935	894,221	1,161,050	1,512,426
10 per cent POE N ($ 000's)	-	-	101	840	2,222	3,426	8,081	15,475	26,348	43,399
10 per cent POE N-1 ($ 000's)	331,366	410,847	554,630	763,058	997,058	1,170,651	1,539,091	1,988,755	2,477,984	3,074,382
AEMO weighted ($ 000's)	192,445	239,864	324,134	447,765	591,039	697,811	931,069	1,227,824	1,566,107	1,998,851

4 Summary of submissions

The identified need and network constraints were first discussed in our non-network options report, published in August 2014. The report detailed several network options on how to address the identified need and we invited feedback from stakeholders, including non-network providers, on possible options to address the identified need.

In response to our non-network options report, we received a limited number of informal enquires relating to the network constraint. As a result we informally extended the closure of the consultation period from November 2014 to early 2015 to allow interested non-network providers greater time to develop responses. Ultimately, no formal submissions were received.

The draft project assessment report was published in January 2016. The draft report set out the range of credible options being considered to address the identified need, as well as our preferred option. We sought feedback from stakeholders on our draft report, and extended the response time for submissions to 18 March 2016.

During the consultation period, we met with two potential proponents to discuss the details of the report and clarify the network limitations. At the end of the consultation period, only one formal submission was received from Greensync Pty Ltd (**Greensync**).

The Greensync non-network proposal planned to address the N rating issue of the BLTS-BMH line via targeted demand management of commercial/industrial and small business customers supplied from BMH zone substation. This had the additional benefit that it would be available for the N-1 constraint at BMH as well.

Since the identified N rating issue on the BLTS-BMH originally published in the draft project assessment report can now be mitigated via operational means, Greensync have decided to withdraw their original proposal as it is no longer economically viable to address the N-1 constraints of the identified need.

5 Assessment of credible options

This section outlines our assessment of the credible options we have considered to address the identified need. Consistent with the Rules, this assessment includes cost-benefit analysis of several reasonable scenarios of future supply and demand. These scenarios enable the sensitivity of the key variables and investment decision signals to be tested.

5.1 Credible options

For the purpose of this final project assessment report, we considered the potential network options set out in Table 5.1. The potential credible network and non-network options were first discussed in our non-network options report, published in August 2014. Following the non-network options report, three credible options were considered for detailed assessment in the draft project assessment report, published in January 2016. The change in operating conditions on the sub-transmission network (referred to in section 3.1.3) has led to the removal of 66kV sub-transmission line works. The three options have now been changed to two options in order to reflect the network constraints in the identified need.

Table 5.1 Potential credible network options

Option	Description
0	Do nothing: This option provides the base case against which the net market benefits of all other options are evaluated.
1	This option includes: • installing a third transformer (25/33 MVA) at MLN zone substation with a third 22kV indoor bus in 2016 and 2017, to be commissioned prior to the 2017/18 summer; • installing a new 22 kV feeder at MLN to tie into the existing network and offload BMH by 5MW in 2016 and 2017, to be commissioned prior to the 2017/18 summer; • installing a third transformer (25/33 MVA), and associated works at BMH zone substation in 2020, 2021 and 2022. This option will: • increase the N and N-1 rating at MLN zone substation, allowing for future load growth and development and reduce the load at risk under a N-1 contingency event at MLN; • reduce the N-1 load at risk at BMH zone substation. The estimated total direct capital and operating costs of this option is $18.1 million ($13.7 million present value in $2016). Operation and maintenance costs are estimated at 1 per cent of the capital costs annually.
2	This option includes: • installing a third transformer (25/33 MVA) at MLN zone substation with a third 22kV indoor bus in 2016 and 2017, to be commissioned prior to the 2017/18 summer; • installing a third transformer (25/33 MVA), and associated works at BMH zone substation in 2016, 2017 and 2018. This option will: • increase the N and N-1 rating at MLN zone substation, allowing for future load growth and development and reduce the load at risk under a N-1 contingency event at MLN; • increase the N and N-1 rating at BMH zone substation, and reduce the load at risk under a N-1 contingency event at BMH. This project is similar in scope to option one, but it involves the advancement of the installation of a new transformer at BMH to 2016, 2017 and 2018, as a result of not installing an additional feeder at MLN to offload BMH. The estimated total direct capital and operating costs of this option is $16.3 million ($13.9 million in $2016 present value), and the advancement of the works at BMH means that the costs are higher than option one in present value terms. Operation and maintenance costs are estimated at 1 per cent of the capital costs annually.

5.2 Classes of market benefits considered

In our assessment of the credible options, we had regard to the following classes of market benefits that may be delivered by the identified need:

- changes to voluntary load shedding;
- involuntary load shedding;
- changes in costs to other parties;

- difference in timing of distribution investment;
- changes in load transfer capacity;
- ability of embedded generators to take up load;
- additional option value; and
- changes in electrical energy losses.

The following sections define how these market benefits have been valued and if they have been considered as material in the assessment of credible options.

5.2.1 Changes to voluntary load shedding

Through our consultation process, we have invited proponents to put forward demand management (load shedding) opportunities. As the majority of customers at both MLN and BMH consist of residential and smaller commercial/industrial customers, changes in voluntary load shedding would require a large take up by customers to defer the need for augmentation.

As we have not received any submissions involving voluntary load sheeding, we have not considered any market benefits associated with voluntary load shedding.

5.2.2 Changes in costs to other parties

MLN and BMH zone substations are supplied BLTS and Keilor Terminal Station (**KTS**) respectively.

The transfer of 5MW of load from BMH to MLN under option 1 will not adversely affect the transmission network supplying the zone substations. We consider, therefore, that no market benefits will arise from changes in costs to other parties.

5.2.3 Difference in timing of distribution investment

There are no major network augmentation projects planned at either MLN or BMH zone substations that would address the identified need within the period of this assessment. In addition, these credible options are not expected to materially alter the timing of any other future planned investments. As a result, we have not estimated any additional market benefits associated with changes in the timing of the distribution investment.

5.2.4 Option value

The estimation of option value benefits are captured in the scenario analysis section of this RIT-D assessment (refer to section 5.3). These are considered adequate to meet the Rules requirements of option value as a class of market benefit.

As a result, we do not propose to estimate any additional option value market benefits for this RIT-D assessment.

5.2.5 Changes in electrical losses

The increased capacity associated with the proposed credible options will lead to a reduction in electrical losses across all options.

The market benefits associated with a change in network losses have been quantified for the credible options by estimating the cost impact for each year of the modelling period. These additional figures were not seen as having a material impact on the assessment or timing of the credible options. As a result we have not included these benefits in the assessments.

5.3 Scenario and sensitivity assessment

In the assessment of credible network options, the Rules require RIT-D proponents to base the RIT-D assessment on a cost-benefit analysis that includes an assessment of reasonable scenarios of future supply and demand.[2]

The development of reasonable scenarios involves sensitivity analysis on key input values within the 'base case' scenario. Where a change to a parameter or value in the base case yields or is likely to yield a change in ranking of credible options, the RIT-D proponent should adopt additional reasonable scenarios that reflect variations in that parameter or value.

The following sections outline the details of the key base case parameters, and the basis of the variables used in the sensitivity analysis.

5.3.1 Demand forecasts

The upper bound forecast is based on a 5 per cent increase in average growth rates on the central value load forecasts. The lower bound forecast is based on a 5 per cent reduction in average growth on the central value load forecasts.

5.3.2 Discount rate

A real discount rate of 8.0 per cent was used in the central base case analysis for NPV calculations. For the purpose of sensitivity analysis, an lower and upper bound discount rate of 6.11 per cent and 9.0 per cent respectively have been applied.

5.3.3 Value of unserved energy

The MLN and BMH unserved energy values were calculated by applying the 2015 AEMO published Victorian VCR to the zone substation customer sectors. For the purpose of assessing sensitivity, a variation in costs resulting from a supply interruption have been calculated based on varying the calculated VCR within ±15 per cent.

5.3.4 Capital cost

The estimated capital cost of each credible option has been calculated using in-house estimation tools of both detailed and high level project scopes by our project estimating team. The cost level variation of these estimates is subject to a ±20 per cent range.

5.3.5 Summary of scenarios and sensitivity testing

A summary of the variables and the range of values used for our sensitivity testing are set out in Table 5.2.

---

[2] NER, cl. 5.17.1.

Table 5.2 Variable ranges of the defined central 'base case' for sensitivity testing

Variable	Lower bound	Base case	Upper bound
Annual growth rate of forecast demand	-5.0 per cent of base case	MLN: 3.4 per cent BMH: 2.9 per cent BLTS-BMH: 3.2 per cent	+5.0 per cent of base case
Discount rate (real)	6.11 per cent	8.0 per cent	9.0 per cent
Value of Customer Reliability (**VCR**)	-15 per cent of base case	MLN: $35,004 per MWh BMH: $35,951 per MWh	+15 per cent of base case
Capital cost	-20 per cent of base case	MLN: $7.8M BMH: $8.0M	+20 per cent of base case

Based on the ranges set out in Table 5.2, we defined six scenarios that enable the sensitivity of the investment decision signal to be tested. These scenarios, set out in Table 5.3, contain plausible and mutually consistent combinations of key assumptions.

Table 5.3 Scenarios considered in the economic evaluation

Scenario	Demand growth	Discount rate	VCR	Capital cost
A	Upper bound	Upper bound	Upper bound	Upper bound
B	Upper bound	Upper bound	Lower bound	Upper bound
C	Central value	Upper bound	Upper bound	Lower bound
D	Central value	Lower bound	Lower bound	Upper bound
E	Lower bound	Lower bound	Upper bound	Upper bound
F	Lower bound	Lower bound	Lower bound	Lower bound

5.4 Results of assessment

The results of our base case analysis, and the scenario testing are set out below.

5.4.1 Results of base case assessment

The total present value of costs for each credible network option consist of direct capital expenditure, operating expenditure, and expected unserved energy. These were evaluated for the base case scenario over a 18 year forecast period. The net market benefits, being the market benefits less costs, were calculated with reference to a do nothing option (which is defined as having a net market benefit of zero).

The results in Table 5.4 show that when assessed against the base case scenario, option one delivers the highest net market benefit of the options considered.

Table 5.4 Expected net economic benefit ($2016, million) of credible options under a base case scenario

Option	Description	Market benefits	Present Value Costs	Net benefit	Ranking
1	Install 3rd transformer at MLN and new 22kV feeder from BMH to MLN	265.4	13.7	251.7	1
2	Install new transformers at MLN and BMH	263.3	13.9	249.4	2

The net market benefit of option one is the highest of the two options for the following reasons:

- option one has a marginally higher overall total project cost (combined capital and operational) of the two options presented in the report. This is due to the deferral of capital costs associated with the installation of the new 22kV MLN distribution feeder; and
- option one reduces a higher initial amount of load at risk with a lower initial capital expenditure when compared to option two.

The additional network benefits of option one, when compared to option two, includes the following:

- the increase in transformer capacity at MLN will improve the station N-1 rating and will bring the station to its ultimate design capacity;
- increase in distribution network tie capacity between MLN and BMH zone substations, allowing for greater load transfers during planned and unplanned outages; and
- the new MLN 22kV feeder will improve the distribution network capacity and allow for future growth and development in the Melton north area.

5.4.2 Results of scenario and sensitivity assessment

The results in Table 5.5 show the result of the NPV analysis for the alternative scenarios defined in Table 5.3. The results of the base case scenario are also shown for comparison. Option one delivers the highest net market benefit of the options considered under each scenario.

Table 5.5 Scenarios considered in the economic evaluation

Scenario	Option 1	Option 2
Base case	251.7	249.4
Scenario A	208.8	206.0
Scenario B	214.9	212.3
Scenario C	221.6	218.8
Scenario D	325.5	322.9
Scenario E	326.8	323.4
Scenario F	335.1	333.1

6 Preferred option

This section sets out the details associated with the proposed preferred option, including the technical characteristics, construction timetable and indicative costs.

6.1 Preferred option

On the basis of the analysis presented in this report, our preferred network option to address the overloaded MLN and BMH zone substations, is to install a third transformer at MLN and a new feeder MLN to transfer 5MW of load off BMH. The analysis set out in section five clearly demonstrates that this option (option one) maximises the net market benefits to all those who produce, consume and transport electricity in the National Electricity Market (**NEM**).

6.2 Technical characteristics

The technical characteristics of the preferred option are as follows:

- install a third transformer (25/33 MVA), with a fourth 66kV circuit breaker and a third 22 kV indoor bus at Melton zone substation, at an estimated cost of $6.0 million;
- install a new 22 kV distribution feeder and tie into the existing MLN network, at an estimated cost of $1.8 million; and
- transfer 5MW of existing BMH customers onto the new MLN feeder to relieve the load at risk at BMH zone substation.

The total estimated direct capital cost of the project is $7.8 million. This cost excludes additional operational costs, as these are not seen as material or relevant when applied to the expansion of a pre-exsiting zone substation.

6.3 Construction timetable

The following flow chart depicts the estimated dates for the milestones of design, construction and commissioning of the preferred option.

Figure 6.1 Construction timetable

Figure 6.2 Proposed single line diagram arrangement

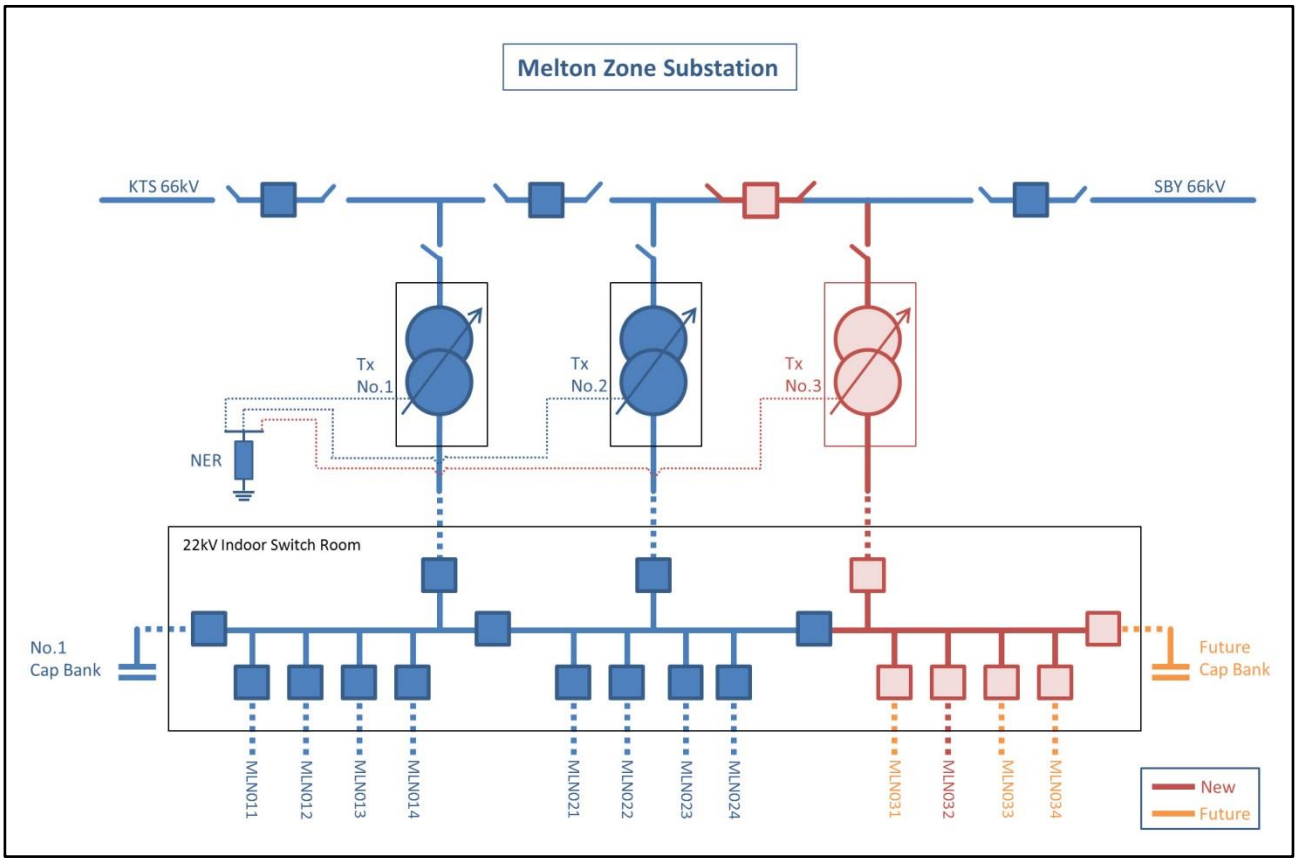

6.4 Satisfaction of RIT-D

We consider that the preferred option satisfies the RIT-D. This statement is made based on the detailed analysis set out in this report. The preferred option is the credible option that has the highest net economic benefit.

6.5 Next steps

This report represents the final stage of the RIT-D process. Following our review of the non-network submission made, the network option chosen to address the identified need is the one that maximises the economic benefit to all those who produce, consume and transport electricity in the NEM.

If within 30 days after the date of publication of this final project assessment report an interested party or parties wish to dispute the conclusion and recommendation made by Powercor; as per the provisions set in clause 5.17.5(c), submissions can be made electronically to the email address provided below:

- ritdenquiries@powercor.com.au

Alternatively, submissions may be lodged by mail to the following address:

- Locked Bag 14090 Melbourne Vic 8001, attention to Andrew Dinning, Network Planning and Development - Central Planning Group, Level 6.

If no formal dispute is raised, we will proceed with the activities necessary to implement the preferred option.

7 Checklist of regulatory compliance

Table 7.1 provides a cross reference between this report and the relevant sections of the Rules.

Table 7.1 Regulatory compliance checklist

Reference	Requirement	Section
5.17.4(j)(1)	Description of the identified need for the investment	3
5.17.4(j)(2)	The assumptions used in identifying the identified need (including, in the case of proposed reliability corrective action, reasons that the RIT-D proponent considers reliability corrective action is necessary)	3.2
5.17.4(j)(3)	If applicable, a summary of, and commentary on, the submissions on the non-network options report	4
5.17.4(j)(4)	Description of each credible option assessed	5.1
5.17.4(j)(5)	Where a Distribution Network Service Provider has quantified market benefits in accordance with clause 5.17.1(d), a quantification of each applicable market benefit for each credible option	5.2–5.4
5.17.4(j)(6)	A quantification of each applicable cost for each credible option, including a breakdown of operating and capital expenditure	5.1–5.4
5.17.4(j)(7)	A detailed description of the methodologies used in quantifying each class of cost and market benefit	5.2–5.4
5.17.4(j)(8)	Where relevant, the reasons why the RIT-D proponent has determined that a class or classes of market benefits or costs do not apply to a credible option	5.2
5.17.4(j)(9)	The results of a net present value analysis of each credible option and accompanying explanatory statements regarding the results	5.4
5.17.4(j)(10)	The identification of the proposed preferred option	6
5.17.4(j)(11)	For the proposed preferred option, the RIT-D proponent must provide: • details of the technical characteristics; • the estimated construction timetable and commissioning date (where relevant); • the indicative capital and operating cost (where relevant); • a statement and accompanying detailed analysis that the proposed preferred option satisfies the regulatory investment test for distribution; and • if the proposed preferred option is for reliability corrective action and that option has a proponent, the name of the proponent	6
5.17.4(j)(12)	Contact details for a suitably qualified staff member of the RIT-D proponent to whom queries on the draft report may be directed	6.5
5.17.4(r)(1)(ii)	Summary of the submissions on the draft project assessment report	4

A Additional information for non-network solutions

Tables A.1 to A.3 provide data on energy and hours at risk for forecast demand (excluding any planned augmentation or operational response such as load transfers to mitigate the impact of an outage, with exception to the normally open 66kV subtransmission tie at BMH zone substation, which will be operationally closed during periods of peak demand).

Table A.1 MLN: magnitude and impact of loss of load

Year	50th percentile demand forecast (MVA)		10th percentile demand forecast (MVA)		50th percentile annual energy at risk (N-1 rating)		10th percentile annual energy at risk (N-1 rating)		50th percentile annual energy at risk (N rating)		10th percentile annual energy at risk (N rating)	
	Summer	Winter	Summer	Winter	MWh	Hrs	MWh	Hrs	MWh	Hrs	MWh	Hrs
2017	66.8	43.0	76.4	45.7	2,085	255	4,881	523	0	0	0	0
2018	69.3	43.5	79.3	46.1	2,604	306	6,072	662	0	0	0	0
2019	71.7	44.1	82.0	46.8	3,157	363	7,403	836	0	0	2	2
2020	74.8	44.9	85.6	47.7	4,023	459	9,550	1,106	0	0	22	9
2021	77.2	45.7	88.3	48.5	4,809	555	11,522	1,351	0	0	53	16
2022	78.4	45.4	89.6	48.2	5,246	607	12,560	1,454	0	0	75	20
2023	81.9	46.6	93.6	49.4	6,811	824	16,302	1,882	2	2	172	33
2024	85.7	48.0	97.9	51.0	8,939	1,123	21,025	2,317	23	9	329	50
2025	89.6	49.0	102.5	52.1	11,738	1,489	26,596	2,718	76	20	554	66
2026	93.8	50.2	107.2	53.3	15,366	1,930	33,062	3,077	177	33	861	88
2027	97.4	50.7	111.4	53.8	18,934	2,264	38,849	3,316	307	48	1,194	110
2028	101.2	51.2	115.6	54.3	23,026	2,587	45,109	3,526	485	62	1,603	132
2029	105.1	51.7	120.1	54.9	27,632	2,878	51,811	3,721	712	78	2,097	156
2030	109.1	52.2	124.7	55.4	32,706	3,127	58,965	3,932	1,005	99	2,691	184
2031	113.3	52.7	129.5	56.0	38,218	3,351	66,577	4,156	1,372	119	3,411	220
2032	117.7	53.2	134.5	56.5	44,152	3,543	74,671	4,372	1,819	143	4,282	264
2033	122.2	53.8	139.6	57.1	50,488	3,746	83,226	4,498	2,357	168	5,338	316

Table A.2 BMH: magnitude and impact of loss of load

Year	50th percentile demand forecast (MVA)		10th percentile demand forecast (MVA)		50th percentile annual energy at risk (N-1 rating)		10th percentile annual energy at risk (N-1 rating)		50th percentile annual energy at risk (N rating)		10th percentile annual energy at risk (N rating)	
	Summer	Winter	Summer	Winter	MWh	Hrs	MWh	Hrs	MWh	Hrs	MWh	Hrs
2017	28.5	27.3	34.4	28.7	1,581	735	4,110	1,461	0	0	0	0
2018	29.3	27.9	35.3	29.3	1,967	874	5,025	1,762	0	0	0	0
2019	30.6	29.1	36.9	30.5	2,923	1,216	7,237	2,385	0	0	0	0
2020	32.1	30.2	38.7	31.8	4,204	1,612	10,150	3,094	0	0	0	1
2021	33.6	31.6	40.5	33.2	6,053	2,119	14,045	3,840	0	0	5	5
2022	34.6	32.4	41.8	34.1	7,397	2,465	16,863	4,292	0	0	14	9
2023	36.3	33.9	43.8	35.6	10,268	3,130	22,329	5,007	0	0	44	21
2024	38.1	35.5	46.0	37.3	13,961	3,860	28,825	5,653	0	0	97	33
2025	39.9	36.9	48.2	38.8	17,918	4,523	35,369	6,164	3	3	176	50
2026	41.9	38.6	50.5	40.6	23,056	5,165	43,271	6,682	15	10	293	71
2027	43.3	40.1	52.3	42.2	27,769	5,650	50,172	7,061	35	18	415	98
2028	44.9	41.7	54.1	43.8	32,965	6,103	57,561	7,395	70	31	591	144
2029	46.4	43.3	56.0	45.6	38,621	6,511	65,402	7,661	134	59	859	218
2030	48.1	45.0	58.0	47.4	44,699	6,855	73,650	7,857	261	114	1,264	317
2031	49.8	46.8	60.0	49.2	51,156	7,147	82,268	7,950	491	189	1,843	442
2032	51.5	48.7	62.1	51.2	57,963	7,376	91,192	7,953	857	282	2,645	599
2033	53.3	50.6	64.3	53.2	65,075	7,541	100,330	7,839	1,395	396	3,735	807

Table A.3 BLTS-BMH: magnitude and impact of loss of load (at BMH end)

Year	50th percentile demand forecast (MVA)		10th percentile demand forecast (MVA)		50th percentile annual energy at risk (N-1 rating)		10th percentile annual energy at risk (N-1 rating)		50th percentile annual energy at risk (N rating)		10th percentile annual energy at risk (N rating)	
	Summer	Winter	Summer	Winter	MWh	Hrs	MWh	Hrs	MWh	Hrs	MWh	Hrs
2017	36.2	31.7	40.5	36.1	154	70	858	286	0	0	0	0
2018	37.9	32.6	42.4	37.2	264	111	1,237	366	0	0	0	0
2019	39.3	34.7	44.0	39.6	521	203	2,107	543	0	0	0	0
2020	42.5	36.7	47.6	41.8	1,091	340	3,580	807	0	0	0	0
2021	43.9	38.1	49.2	43.5	1,580	447	4,819	1,042	0	0	0	0
2022	45.4	39.6	50.9	45.2	2,222	570	6,409	1,321	0	0	0	0
2023	47.0	41.2	52.6	46.9	3,056	730	8,412	1,644	0	0	0	0
2024	48.6	42.8	54.4	48.8	4,144	938	10,877	2,004	0	0	0	0
2025	50.2	44.4	56.3	50.7	5,552	1,199	13,833	2,367	0	0	0	0
2026	51.9	46.2	58.2	52.6	7,339	1,504	17,323	2,759	0	0	0	0
2027	53.7	48.0	60.2	54.7	9,565	1,851	21,386	3,189	0	0	0	0
2028	55.5	49.8	62.2	56.8	12,259	2,213	26,038	3,608	0	0	2	2
2029	57.4	51.8	64.3	59.0	15,456	2,591	31,301	4,034	0	0	11	6
2030	59.4	53.8	66.5	61.3	19,196	3,009	37,200	4,486	0	0	28	10
2031	61.4	55.9	68.8	63.7	23,506	3,440	43,771	4,955	1	1	58	16
2032	63.5	58.1	71.1	66.2	28,393	3,858	51,008	5,409	6	4	104	24
2033	65.6	60.3	73.5	68.8	33,887	4,302	58,906	5,852	20	8	174	39